环保物料

Reference Informations:
**Material: Pin: Brass*
Wafer: Nylon & PBT, UL94V-0

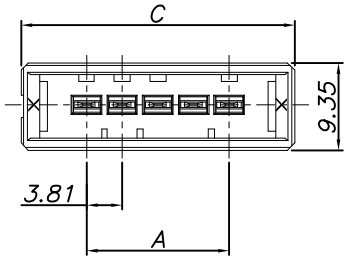

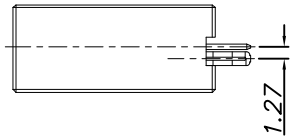

Dimensional Information:

Part No.	Dimensions		
	A	B	C
3P	7.62	13.97	21.62
4P	11.43	17.78	25.43
5P	15.24	21.59	29.24
6P	19.05	25.40	33.05
8P	26.67	33.02	40.67
10P	34.29	40.64	48.29

Unit: mm

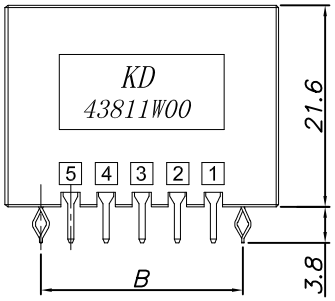

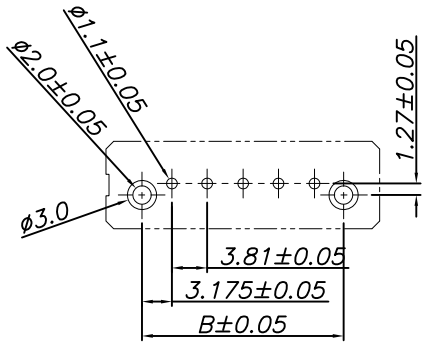

P.C.B. LAYOUT

				GENERAL TOLERANCES		SCALE: 1:1	NAME	DATE	深圳市联索连接器有限公司 SHENZHEN UNICABLE CONNECTOR CO., LTD.	PART. NO: 43811W00-NP*-A1-**
				LINEAR	ANGLES	APPROVED			公司网址WWW.SZLSTC.CN 公司电话0755-23765650 公司邮箱SZLSTC@126.COM 公司传真0755-23765753	DWG. NO: ENDE05
				0.0±0.25	X° REF±6°	DESIGNER			TITLE: 3.81mm pitch Single Wafer	
A0	新图面发行	2018.07.28	UNIT: MM	0.00±0.15	X° ±3°					
REV.	REVISION RECORD	DATE	SIZE: A4	0.000±0.08	X° X'±2°	DRAWN	肖丽娟	2018.07.28		REV: A0 SHEET: 1/1